REVISIONS				
REV	EC #	DESCRIPTION	DATE	APPD
-		INITIAL RELEASE		

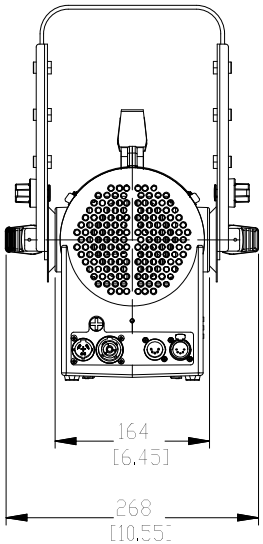

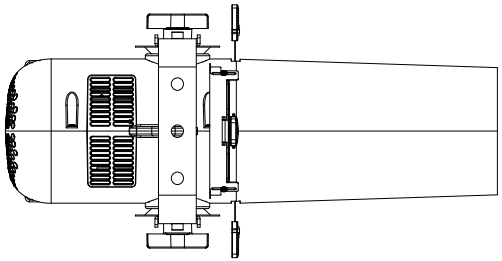

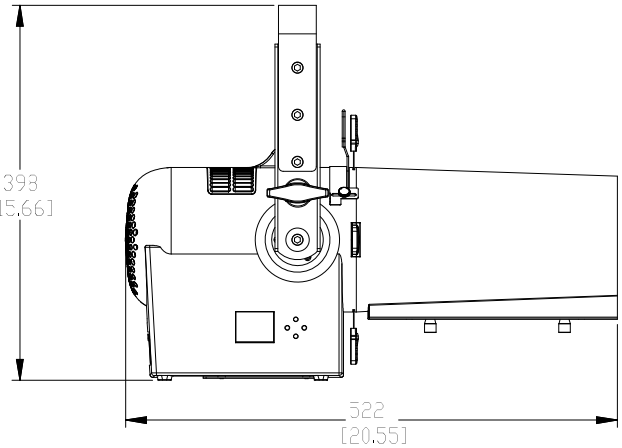

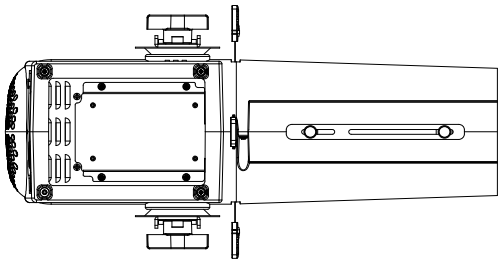

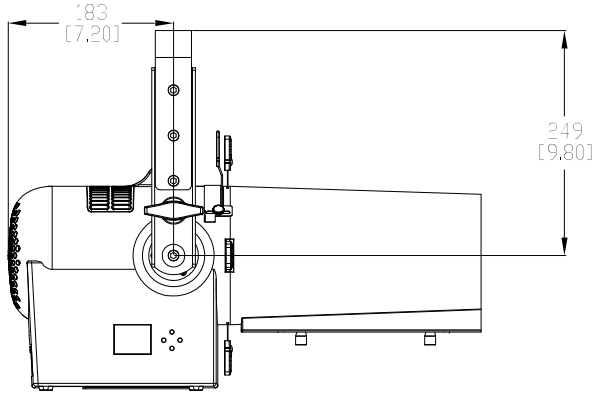

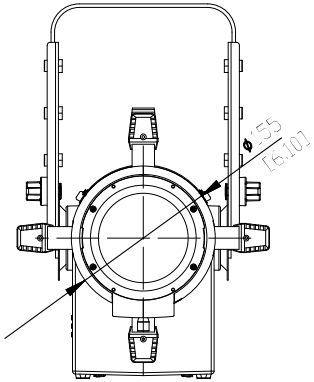

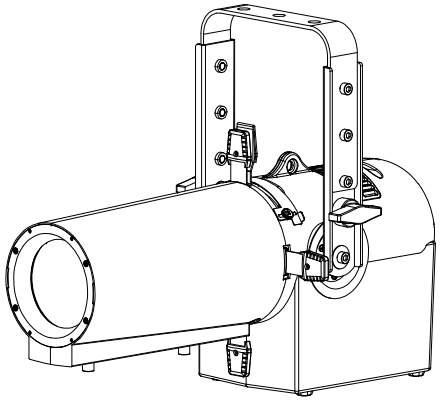

NEXT ASSY	TOLERANCE AS F	N/A	VARI-LITE, LLC 1301 RETAIL ST. DALLAS, TX 75238
NOTICE INFORMATION AND DESIGN DISCLOSED IN THIS DOCUMENT ARE CONSIDERED PROPRIETARY AND SHALL NOT BE REPRODUCED OR DISCLOSED WITHOUT VARI-LITE, INC.'S WRITTEN PERMISSION.	MATERIAL FINISH	CAGE CODE PROPRIETARY AND PROPRIETARY INFORMATION SCALE: NONE (FOR REFERENCE ONLY) ALL DIMENSIONS ARE IN INCHES UNLESS NOTED OTHERWISE. DIMENSIONS ALL BOSS AND SCREW EDGES	ZOOMSPOT 3D SIZE D · REVISION A · DRAWING NUMBER SCALE: N.A. · SHEET 1 OF 1

NOTICE
INFORMATION AND DESIGN DISCLOSED IN THIS DOCUMENT ARE CONSIDERED PROPRIETARY AND SHALL NOT BE REPRODUCED OR DISCLOSED WITHOUT VARI-LITE, INC.'S WRITTEN PERMISSION.
STRINGENT ENFORCEMENT WILL BE PUNISHED TO THE FULLEST EXTENT OF THE LAW.